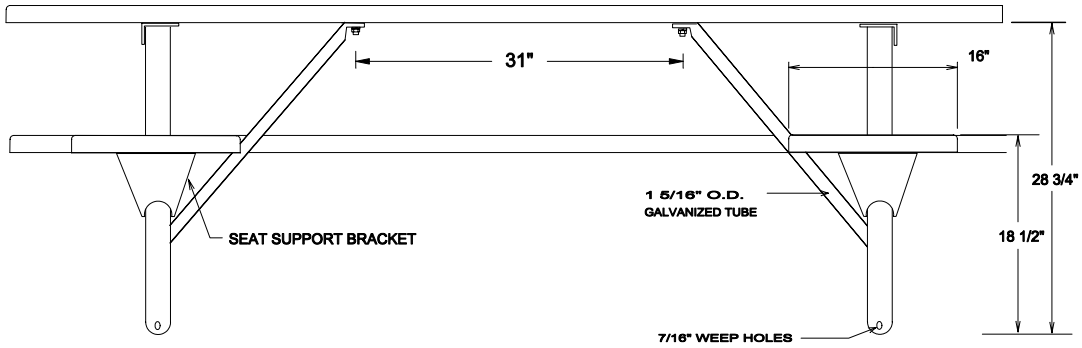

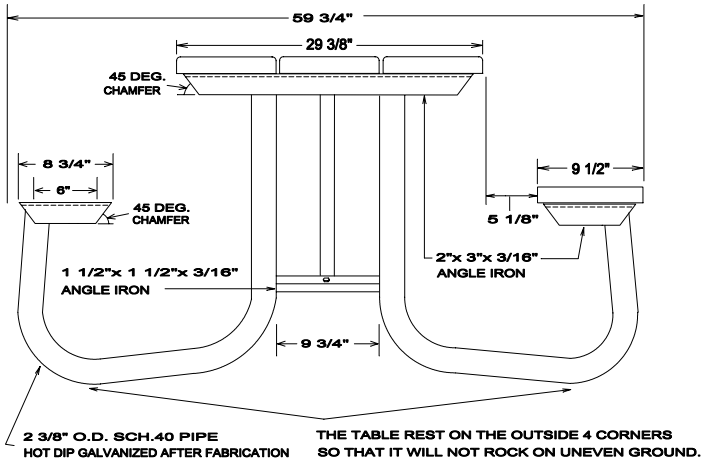

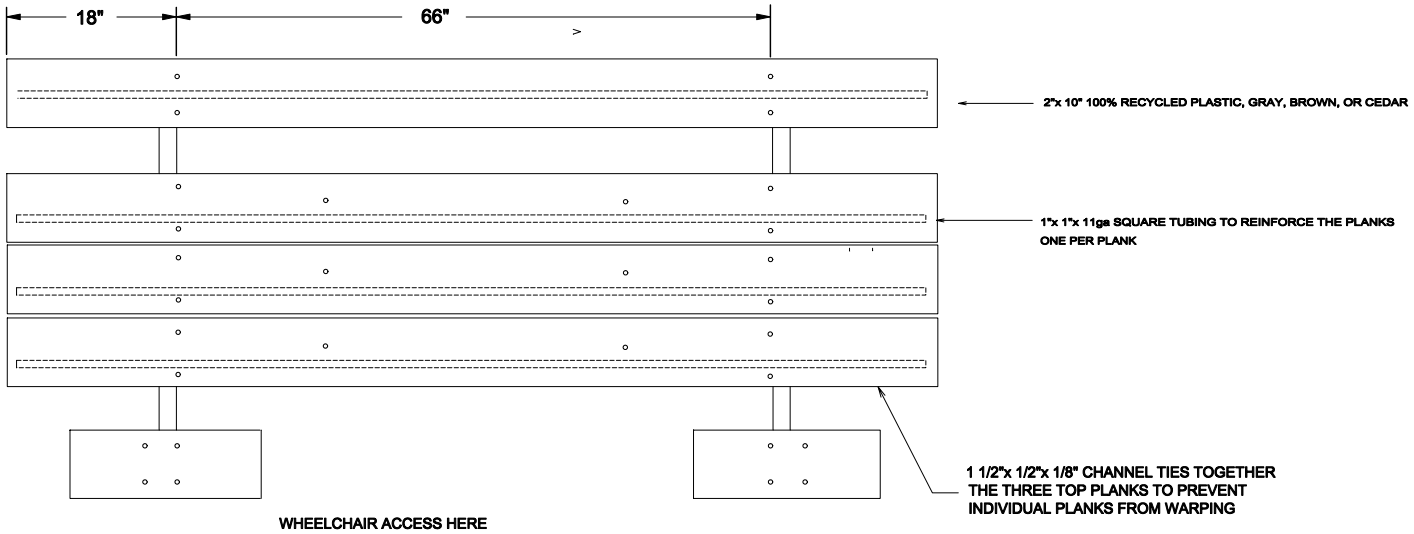

FILE No. 8J2GRRP-SEWC

KAY PARK

MODEL 8J2GRRP-SWC		WT. 385 Lbs.	
DRAWN BY CKB	DATE 3/9/00	SCALE NONE	